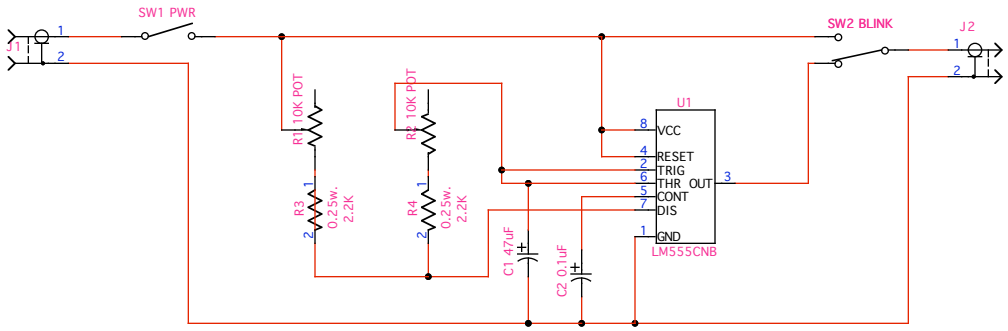

EL WIRE BLINKER		
REV	01	
DESIGNED	2004/09/01	DRKP
DRAWN	2004/09/01	DRKP